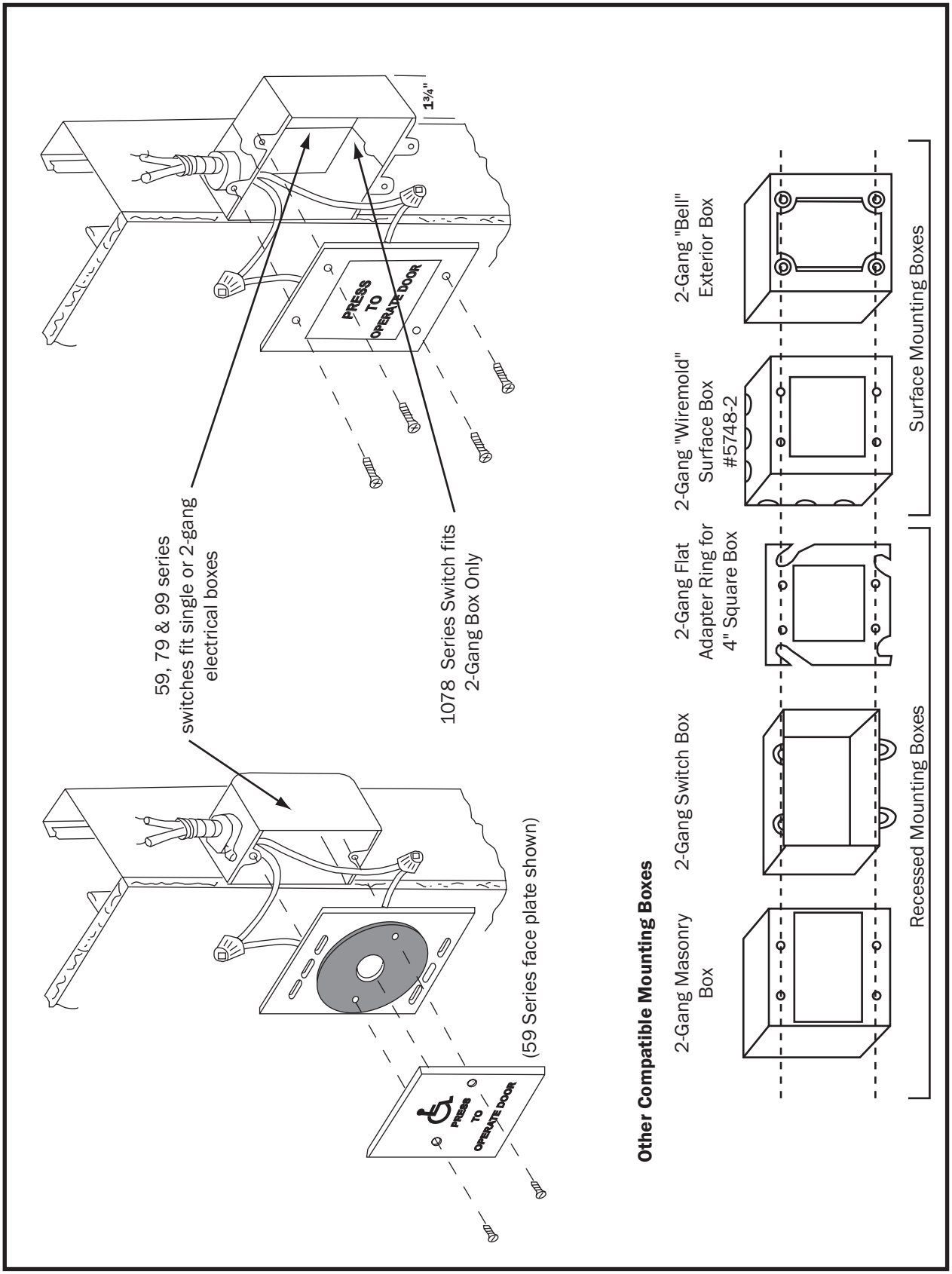Electrical Box Compatibility Chart